Technical Data Sheet

CODE 17185

LINEO 100 T

Mixed flow extractor fans

Certifications

CE

CCC

G-Mark

UKCA

CB TEST CERTIFICATE

Technical and performance data

Frequency (Hz)	50
Insulation class	II°
IP	44
Max absorbed current at Max speed (A)	0,11
Max absorbed current at Min speed (A)	0,09
Max absorbed power at Max speed (W)	23
Max ambient temperature for continuous operation (°C)	60
Nominal diameter (mm)	100
Power absorbed at 1st speed (W)	20
Voltage (V)	220-240
Weight (Kg)	2
Airflow at 1st speed (l/s)	50
Airflow at 1st speed (m³/h)	180
Breakout sound power LWA at Max speed [dB (A)]	50,0
Breakout sound power LWA at Min speed [dB (A)]	41,6
Breakout sound pressure at 3m at Max speed Lp [dB (A)]	29,5
Breakout sound pressure at 3m at Min speed Lp [dB (A)]	21,2
Max airflow at Max speed (l/s)	70,8
Max airflow at Max speed (m³/h)	255
Max pressure at Max speed (mmH20)	16,5
Max pressure at Max speed (Pa)	161,9
Max RPM	2030
Min RPM	1520
Potenza sonora at supply side at Min speed LWA [dB (A)]	45,6
Pressure at 1st speed (mmH20)	13
Pressure at 1st speed (Pa)	127,5
Sound power at extract side at Max speed LWA [dB (A)]	56,6
Sound power at extract side at Min speed LWA [dB (A)]	49,5
Sound power at supply side at Max speed LWA [dB (A)]	53,6
Sound pressure at extract side at 3m at Max speed Lp [dB (A)]	39,0
Sound pressure at extract side at 3m at Min speed Lp [dB (A)]	31,9
Sound pressure at suply side at 3m at Max speed Lp [dB (A)]	36,1
Sound pressure at suply side at 3m at Min speed Lp [dB (A)]	28,0

Dimensions

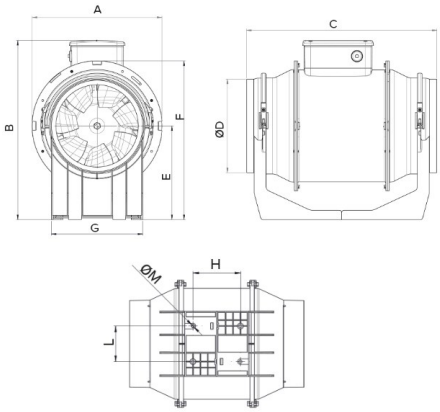

Size A (mm)	188,5
Size B (mm)	211
Size C (mm)	303
Size D (mm)	96
Size E (mm)	101,5
Size F (mm)	189
Size G (mm)	90
Size H (mm)	80
Size L (mm)	60
Size M (mm)	5,5

PER INFORMAZIONI / FOR INFORMATION

ITALY
Pre Sales:
prevendita@vortice-italy.com
After Sales:
postvendita@vortice-italy.com

UNITED KINGDOM & REP. OF IRELAND
Sales Dept:
sales@vortice.ltd.uk
Technical Dept:
technical@vortice.ltd.uk

OTHER COUNTRIES
Sales Dept:
export@vortice-italy.com
After Sales:
after-sales@vortice-italy.com

Technical Data Sheet

CODE 17185

LINEO 100 T

Mixed flow extractor fans

Description

• Enclosures made of fire resistant plastic resin, E2 class, according with ISO EN 11925-2: 2010, in areas close to motor and electrical components.
• Nominal diameter 100 mm.
• Induction motor, thermally protected, with shaft mounted on ball bearing supports, coupled with a centrifugal impeller.
• Equipped with an electronic timer for automatic operation at maximum speed, which can be set in the 3-20' range at the installation (default setting 3').
• High water resistance: IPX5 (if installed in a duct).
• Speed adjustable through Vortice speed devices.

Curves

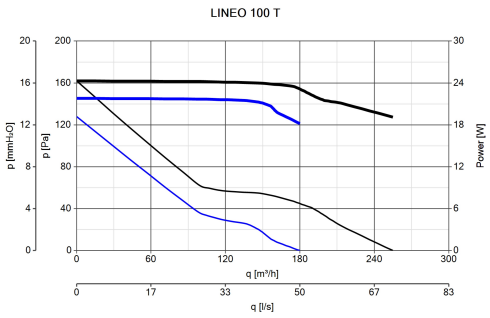

Accessories

DUO
Code 22914

LINEO-G 100
Code 22701

LINEO-PF 100
Code 22577

IN-LINE-S 100
Code 22551

LINEO-C 100
Code 22584

PER INFORMAZIONI / FOR INFORMATION

ITALY
Pre Sales:
prevendita@vortice-italy.com
After Sales:
postvendita@vortice-italy.com

UNITED KINGDOM & REP. OF IRELAND
Sales Dept:
sales@vortice.ltd.uk
Technical Dept:
technical@vortice.ltd.uk

OTHER COUNTRIES
Sales Dept:
export@vortice-italy.com
After Sales:
after-sales@vortice-italy.com